Workplace-system luminaire Tameto SAHQ 44 RD

113035000-00577614

Waldmann
ENGINEERS OF LIGHT

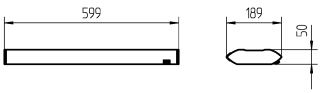

20 YEARS warranty CE

GST 18i3F REV

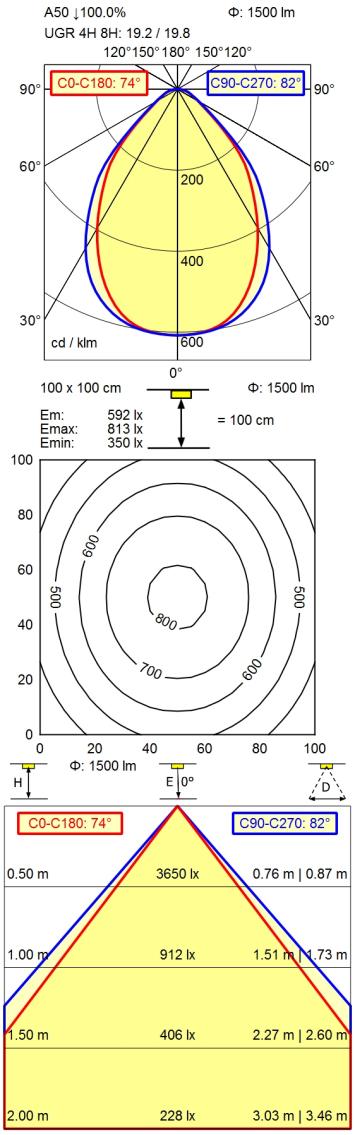

Light source	LED
Work equipment	Electronic ballast
Connected load	220 - 240 V; AC; 50 Hz; 60 Hz
Power consumption	ca. 18 W
Luminous flux	approx. 1.500 lm
Luminous efficiency [1]	approx. 83 lm/W
Light type/-color	Cold white
Colour temperatur	approx. 4.000 K
Color rendering index	CRI ≥ 90; R9 ≥ 50
Light distribution	Direct; Symmetric; approx. 100 %
Beam angle	75°
Chromaticity tolerance LED	< 3 SDCM
Glare control	Prism aperture
Luminance (L65)	≤ 3.800 cd/m²
UGR class (4H 8H; EN 12464-1)	≤ 22
System of protection/Class	IP 20; I
Technology	Continuously dimmable; Touch DIM
Operation	Rocker switch
Housing	Aluminium/plastic; Anodised; Aluminium coloured anodised
Light source cover	Structured; Plastic
Mains lead	Built-in plug; Connection box; GST 18i3F REV
Design	mounted version
Fastening	Screw down lash
Decorative contrast side parts	Black
EAN	4013330049256
Weight without/incl. packaging	ca. 3,4 kg; 4,6 kg
Packaging dimensions	ca. 865 mm; 420 mm; 102 mm
Special features	Through-wired

[1] For luminaires with separate control gear, the luminous efficacy refers to the luminaire head without control g

Errors and technical changes excepted. Images can vary from original.
Photometric and electrical data may vary due to component tolerances.

© 13/04/2025 H.Waldmann GmbH & Co. KG

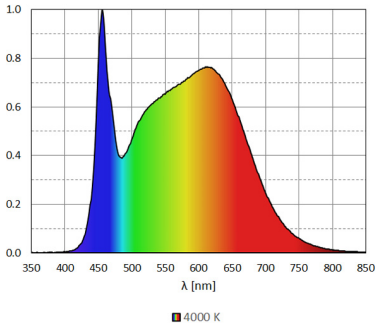

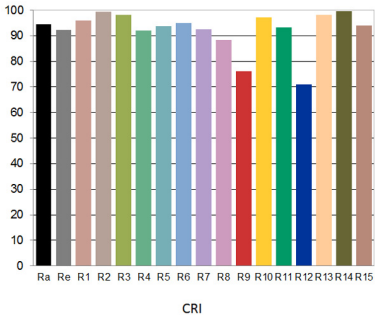

© 13/04/2025 H.Waldmann GmbH & Co. KG